CRIMPING | SERVICE | P20AP

pneumatyczna zakuwarka

FEATURES

- Portable 1 ½" Crimper
- No electricity required
- Enerpac Hand Pump
- Complete Die Set

OPTIONS

- Electrical Pump
- 220V 1 Phase / 400V 3 Phase
- Hand Pump
- Custmized Die sets
- Custmized Logo

CONTROL

- Micro Dail

P20AP

TECHNICAL DATA

Max. crimping dia (mm/inch) 1)	61/2.40
Max crimping dia with master dies (mm/inch)	94/3.7
Max. crimping force (KN)	1370
Max. crimping force (tonnage)	137
Hydraulic hose size (inch)	1 ½ *
Industrial hose size (inch)	2.40 *
Die set series	20
Max. opening (mm) 2)	+25
Max. opening without dies (mm)	109
Master die D/L (mm)	84/80
Master die D/L (inch)	3.31/3.15
Motor Power	Air pressure

DIMENSIONS (LxWxH)

Machine (mm)	350x250x250
Machine (inch)	13.8x9.8x9.8
Packaged (mm)	640x510x430
Packaged (inch)	25.2x20.1x16.9

WEIGHT

Machine (kg/lbs)	110/243
Packaged (kg/lbs)	123/271

*** ACCORDING TO THE FITTING.**

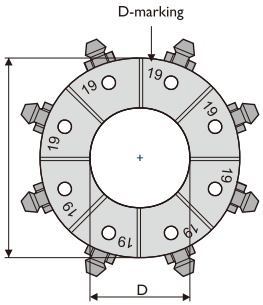

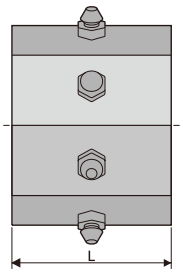

1) With standard dies. Crimping range can be increased with special dies.

2) Maximum opening is the total die travel. Addthis value to the minimum crimping diameter of the die set used. The result is the maximum opening of the machine with die set in place.

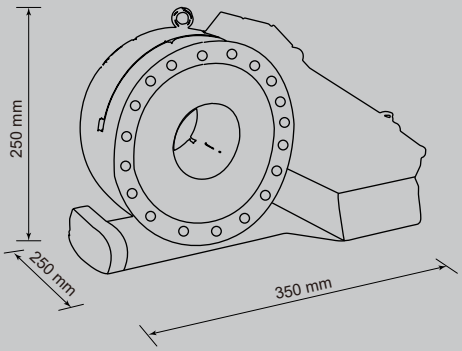

DIE SET 20-SERIES

DieSetNo	D (mm)	L (mm)	Crimp. range (mm)
*18506/10	10	55	10.0-12.0
*18506/12	12	55	12.0-14.0
18506/14	14	55	14.0-17.0
18506/17	17	55	17.0-20.0
18506/20	20	55	20.0-24.0
18506/24	24	55	24.0-28.0
18506/28	28	75	28.0-32.0
18506/32	32	75	32.0-36.0
18506/36	36	75	36.0-40.0
18506/40	40	90	40.0-44.0
18506/44	44	90	44.0-50.0
18506/50	50	90	50.0-52.0
*18506/52	52	90	52.0-58.0
*18506/58	58	90	58.0-64.0

* Optional die sets at additional cost

Products images & Specifications may alter prior official notice at any time.